USA
175 Sarasota Center Blvd., Sarasota FL 34240-9258
Tel: 941-371-1003 • Fax: 941-377-5428 • E-mail: sales@wpiinc.com

UK
1 Hunting Gate, Hitchin, Hertfordshire SG4 0TJ
Tel: 44 (0)1462 424700 • Fax: 44 (0)1462 424701 • E-mail: wpiuk@wpi-europe.com

Germany
Saarstraße 23, D-61169 Friedberg (Hesson), Germany
Tel: +49 (0)6031 1602171 • Fax: +49 (0)6031 1602180 • E-mail: wpide@wpi-europe.com

China & Hong Kong
WPI Shanghai Trading Co., Ltd.
Rm 18A, No8 Dongfang Rd., Pudong District, Shanghai, 200120 PR China
Tel: +86 21 6888 5517 • E-mail:chinasales@china.wpiinc.com

Brazil
Av. Conselheiro Nébias, 756 sala 2611, Santos-CEP: 11045-002, São Paulo Brazil Tel: (013) 406-29703 • E-mail: info@brazil.wpiinc.com

Internet
www.wpiinc.com • www.wpi-europe.com • www.wpiinc.net • www.wpibrasil.com.br

WORLD
PRECISION
INSTRUMENTS

INSTALLATION GUIDE

502300 Series

Digital Stereotaxic Frame

Serial No._____

www.wpiinc.com

032119

WARRANTY

WPI (World Precision Instruments) warrants to the original purchaser that this equipment, including its components and parts, shall be free from defects in material and workmanship for a period of 30 days* from the date of receipt. WPI's obligation under this warranty shall be limited to repair or replacement, at WPI's option, of the equipment or defective components or parts upon receipt thereof f.o.b. WPI, Sarasota, Florida U.S.A. Return of a repaired instrument shall be f.o.b. Sarasota.

The above warranty is contingent upon normal usage and does not cover products which have been modified without WPI's approval or which have been subjected to unusual physical or electrical stress or on which the original identification marks have been removed or altered. The above warranty will not apply if adjustment, repair or parts replacement is required because of accident, neglect, misuse, failure of electric power, air conditioning, humidity control, or causes other than normal and ordinary usage.

To the extent that any of its equipment is furnished by a manufacturer other than WPI, the foregoing warranty shall be applicable only to the extent of the warranty furnished by such other manufacturer. This warranty will not apply to appearance terms, such as knobs, handles, dials or the like.

WPI makes no warranty of any kind, express or implied or statutory, including without limitation any warranties of merchantability and/or fitness for a particular purpose. WPI shall not be liable for any damages, whether direct, indirect, special or consequential arising from a failure of this product to operate in the manner desired by the user. WPI shall not be liable for any damage to data or property that may be caused directly or indirectly by use of this product.

Claims and Returns

Inspect all shipments upon receipt. Missing cartons or obvious damage to cartons should be noted on the delivery receipt before signing. Concealed loss or damage should be reported at once to the carrier and an inspection requested. All claims for shortage or damage must be made within ten (10) days after receipt of shipment. Claims for lost shipments must be made within thirty (30) days of receipt of invoice or other notification of shipment. Please save damaged or pilfered cartons until claim is settled. In some instances, photographic documentation may be required. Some items are time-sensitive; WPI assumes no extended warranty or any liability for use beyond the date specified on the container

Do not return any goods to us without obtaining prior approval and instructions from our Returns Department. Goods returned (unauthorized) by collect freight may be refused. Goods accepted for restocking will be exchanged or credited to your WPI account. Goods returned which were ordered by customers in error are subject to a 25% restocking charge. Equipment which was built as a special order cannot be returned.

Repairs

Contact our Customer Service Department for assistance in the repair of apparatus. Do not return goods until instructions have been received. Returned items must be securely packed to prevent further damage in transit. The Customer is responsible for paying shipping expenses, including adequate insurance on all items returned for repairs. Identification of the item(s) by model number, name, as well as complete description of the difficulties experienced should be written on the repair purchase order and on a tag attached to the item.

** Electrodes, batteries and other consumable parts are warranted for 30 days only from the date on which the customer receives these items.*

DECLARATION OF CONFORMITY

WORLD PRECISION INSTRUMENTS, INC.
175 Sarasota Center Boulevard
Sarasota, FL 34240-9258 USA
Telephone: (941) 371-1003 Fax.: (941) 377-5428
e-mail: wpi@wpiinc.com

DECLARATION OF CONFORMITY

We: World Precision Instruments, Inc.
175 Sarasota Center Boulevard
Sarasota, FL 34240-9258 USA

As the manufacturer of the apparatus listed, declare that the product(s):
DIGITAL STEREOTAXIC FRAME - PN: 502300

to which this declaration relates is/are in conformity with the following standards or other normative documents:

EMC: **EN 61000-6-1**
EN 61000-6-3

and therefore conform(s) with the protection requirements of Council Directive 2004/108/EC relating to electromagnetic compatibility and Council Directive 2006/95/EC relating to safety requirements:

Issued on: March 31, 2014

Cliff Bredenberg
President

World Precision Instruments, Inc.
175 Sarasota Center Boulevard
Sarasota, FL 34240-9258 USA

Glen Carlquist
Vice President of Production

World Precision Instruments, Inc.
175 Sarasota Center Boulevard
Sarasota, FL 34240-9258 USA

CONTENTS

ABOUT THIS MANUAL 1
INTRODUCTION 1
- Features 1
- Options 2
- Notes and Warnings 2
- Parts List 3
- Unpacking 3

ASSEMBLY 3
MAINTENANCE 8
- Replacing the Batteries 8

ACCESSORIES 9
- Adaptors 9
- Probe Holders 12
- Ear Bars 13
- Other Accessories 13

DECLARATION OF CONFORMITY 14
WARRANTY 15
- Claims and Returns 15
- Repairs 15

Copyright © 2019 by World Precision Instruments. All rights reserved. No part of this publication may be reproduced or translated into any language, in any form, without prior written permission of World Precision Instruments.

Ear Bars

502055 Ear Bars, Rat, 18º, (pair)
502056 Ear Bars, Rat, 45º, (pair)
502224 Ear Bars, Cat, 18º, (pair)
502225 Ear Bars, Cat, 45º, (pair)
502235 Ear Bars, Mouse, 60º. Non-rupture, (pair)
502242 Ear Bars, Rat, Hollow. 1.5mm hole for auditory stimulation

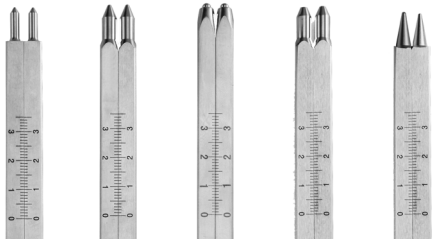

Fig. 34—Ear bars from left to right–502235, 502056, 502225, 502242, 502055.

Other Accessories

502053 Mask, Gas Anesthesia, Mouse
502054 Mask, Gas Anesthesia, Rat
502201 V-Clamp, 10/32 screw
502213 Platform, Gas Anesthesia, with mouse Mask (use with 502063)
502243 Adjustable Stage Platform for 502600 series, 2cm high
503598 Micro-Drill, 35K RMP, 110/220VAC, w/ a set of bits
503599 Micro-Drill, 35K RMP, 240VAC, w/ a set of bits
503567 Heating Plate for 502063, 4X15cm, 5mm thick (use with ATC2000)

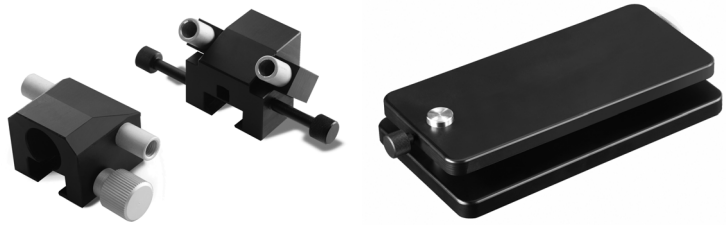

Fig. 35—(Left) The gas mask on the left is for a rat (502054), and the one on the right is for a mouse (502053).
Fig. 36—(Right) The Adjustable Stage Platform (502243) can be used with the 502600 series stereotaxic frames to raise the platform 2cm.

World Precision Instruments

Probe Holders

502210 Probe Holder with corner clamp, 0.3-1.5mm opening
502067 Probe Holder with side clamp, 0.3-3.5mm opening
502070 Cannula Holder, opens to 3.4mm
502068 Large Probe Holder, 6.5-13mm opening
502237 Extra Large Holder for OmniDrill35 Microdrill
502236 Microdialysis Probe Holder, 1.5mm hole
502244 Micrometer Adjustable Electrode Holder, 10µ resolution, 25mm travel, 0.3-1.5mm opening
502245 Manual Microsyringe Injection Holder, 10µ resolution, 25mm travel

Fig. 29—The Manual Microsyringe Injection Holder (502245) can be mounted on any stereotaxic frame.

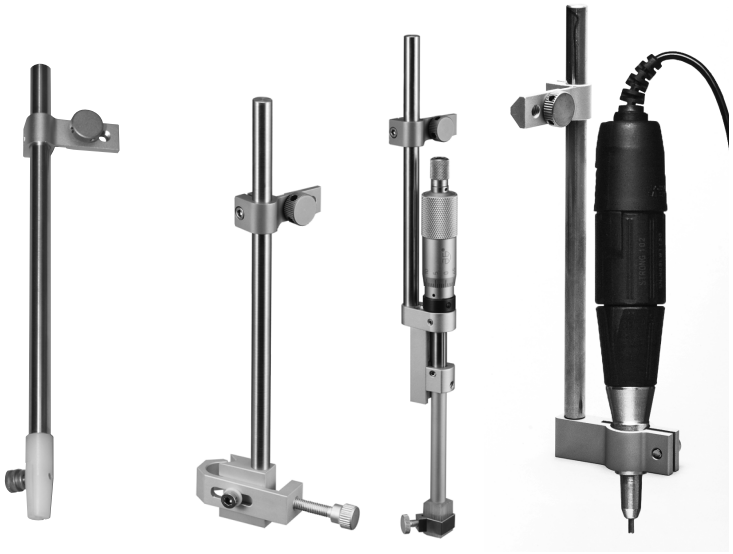

Fig. 30—(Left) Cannula Holder (502070)
Fig. 31—(Center Left) Large Probe Holder (502068)
Fig. 32—(Center Right) Micrometer Adjustable Electrode Holder (502244)
Fig. 33—(Right) Extra large Holder for the OmniDrill 35 Microdrill (502237). The drill is not included with the probe holder.

ABOUT THIS MANUAL

The following symbols are used in this guide:

This symbol indicates a CAUTION. Cautions warn against actions that can cause damage to equipment. Please read these carefully.

This symbol indicates a WARNING. Warnings alert you to actions that can cause personal injury or pose a physical threat. Please read these carefully.

NOTES and TIPS contain helpful information.

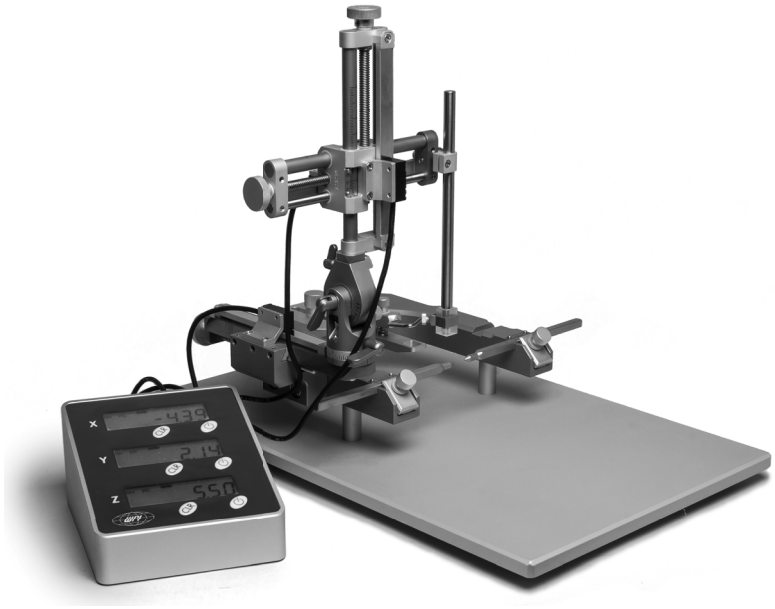

Fig. 1—The battery powered, digital display shows the position of all three axes.

INTRODUCTION

This Digital Stereotaxic Frame features sealed electronic sensors and an easy-to-read LCD display with 10µm resolution in all three axes. A zeroing function aids in targeting specific coordinates. The battery-powered display is electronically quiet, a requirement for electrophysiology experiments.

Features

- Large LCD display from sealed sensors on each axis
- Adaptors available for use with rats, mice, birds, cats, guinea pigs and other species
- 80 mm of travel in three planes
- 180° rotation and lock at any vertical angle

- 360° rotation and lock at any level angle
- Syringe pump and drill can be attached directly
- Dual-lead screws provide stable and accurate movement
- Maintains accuracy and flexibility under different temperatures
- Targets specific coordinates by zeroing
- 10μm precision of manipulator in all directions
- Extended base plate 400mmX255mm suitable for various animals
- Vertical lock and fixing knob are separated to ensure accurate position at any angle
- The precisely-designed rotary knob and U frame allow sufficient space for the anterior-posterior operation
- Curved design of nose clamp fixes the head of the animals more securely
- Desktop display is separate from sensors, making it easy to read
- Battery-powered sensors, without electronic noise, are suitable for electrophysiology experiment

Options

502300 Digital Stereotaxic Frame with 18°Ear Bars
502350 Digital Stereotaxic Frame with 45°Ear Bars
502303 Dual Manipulator Digital Stereotaxic Frame with 18°Ear Bars
502353 Dual Manipulator Digital Stereotaxic Frame with 45°Ear Bars

These frames are also available with an **UMP3-1** UltraMicroPump.

Notes and Warnings

DO lubricate moving parts with light oil. (Do not spray oils with lubricant directly on the frame. Instead, spray a lint free cloth with oil, and wipe the metal rods in moving mechanisms with it.)

DO clean instruments with mild soap or zephrin.

DO store in dust-free areas.

CAUTION: **DO NOT** drop any portion of the apparatus, as this may seriously disturb the calibration.

CAUTION: **DO NOT** allow the instrument to accumulate blood, hair, dust or other foreign matter, as this will disrupt movement and accuracy.

CAUTION: DO NOT autoclave the equipment, because this will severely damage bushing components. If sterilization is required, use gas or germicide. Do not exceed 120°F (48°C).

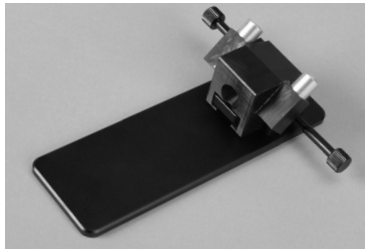

Fig. 26—The Gas Anesthesia Platform (502213) can be mounted on the neonatal rat adapter.

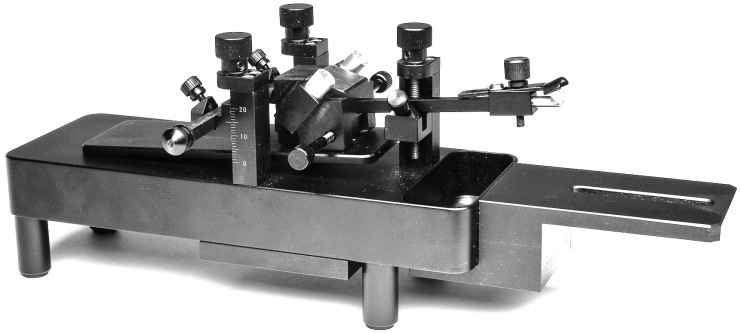

Fig. 27—502213 gas anesthesia platform mask is shown mounted on the 502063 mouse/ neonatal rat adaptor for the 502600.

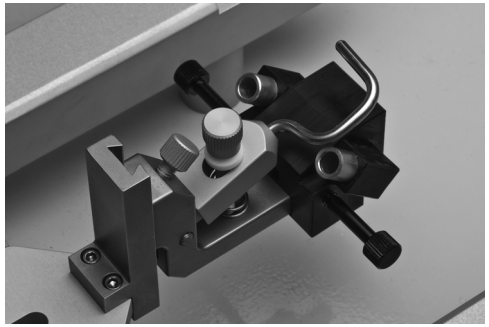

Fig. 28—502054 Gas mask attached to the standard stereotaxic frame rat adaptor (502204).

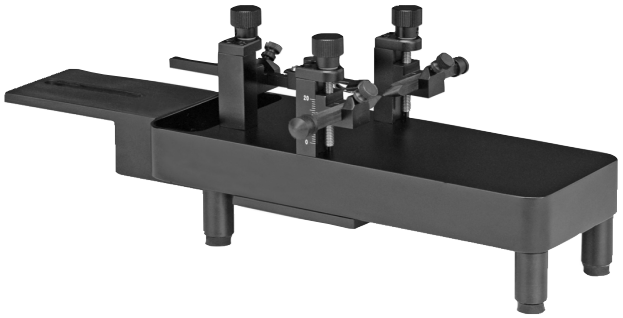

Fig. 23—The Mouse and Neonatal Rat Adapter (502063).

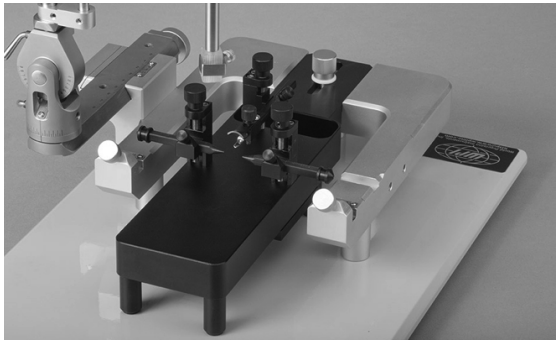

Fig. 24—Image shows the 502063 mounted on a standard stereotaxic frame (502600).

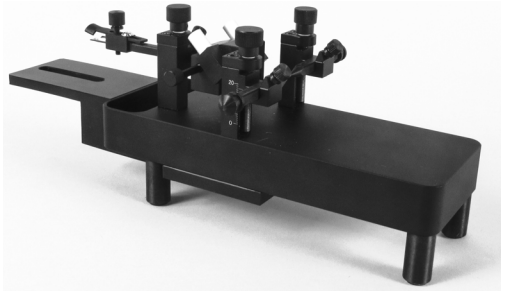

Fig. 25—Gas mask (502053) is shown mounted on the mouse and neonatal rat adaptor (502063).

Parts List

After unpacking, verify that there is no visible damage to the sensor. Verify that all items are included:

(1) Base plate with rat adapter

(1) Manipulator

(1) Probe Holder with mounting adapter

(2) Ear bars

(1) Controller

(1) Instruction Manual

Unpacking

Upon receipt of this instrument, make a thorough inspection of the contents and check for possible damage. Missing cartons or obvious damage to cartons should be noted on the delivery receipt before signing. Concealed damage should be reported at once to the carrier and an inspection requested. Please read the section entitled "Claims and Returns" on page 15 of this manual. Please contact WPI Customer Service if any parts are missing at 941.371.1003 or customerservice@wpiinc.com.

Returns: Do not return any goods to WPI without obtaining prior approval (RMA # required) and instructions from WPI's Returns Department. Goods returned (unauthorized) by collect freight may be refused. If a return shipment is necessary, use the original container, if possible. If the original container is not available, use a suitable substitute that is rigid and of adequate size. Wrap the instrument in paper or plastic surrounded with at least 100mm (four inches) of shock absorbing material. For further details, please read the section entitled "Claims and Returns" on page 15 of this manual.

ASSEMBLY

1. The rat adapter assembly (Fig. 2) is shipped mounted upside down on the main frame to prevent damage. Loosen the thumbscrew. Flip the rat adapter assembly right side up, and reinstall the rat adapter (Fig. 3).

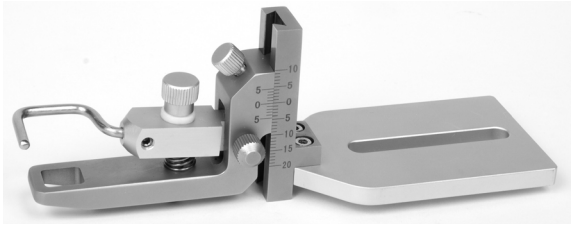

Fig. 2—For shipping, the rat adapter is mounted upside down.

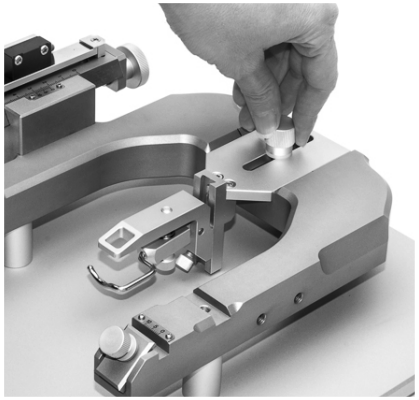

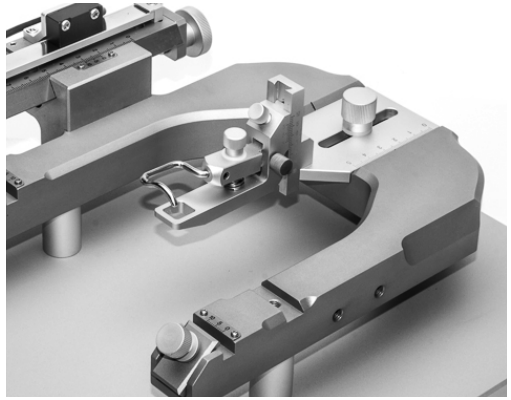

Fig. 3—(Left)Remove the thumbscrew, flip the rat adapter and reinstall the thumbscrew.
Fig. 4—(Right) The rat adapter is properly installed.

2. To install the manipulator, loosen the turret lock handle, so that it does not protrude into the mounting hole (Fig. 5). If the lock is not loosened sufficiently, the turret will not fit over the turret post.

3. Align the turret with the turret post (Fig. 5), so that the manipulation assembly slides down into contact with the base of the turret post.

   NOTE: The orientation of the manipulator can be adjusted in the horizontal plane. Simply loosen the turret lock handle and rotate the manipulator assembly to the desired orientation. Use the scale on the base of the manipulator assembly to properly align it (Fig. 7). Tighten the turret lock when you are finished.

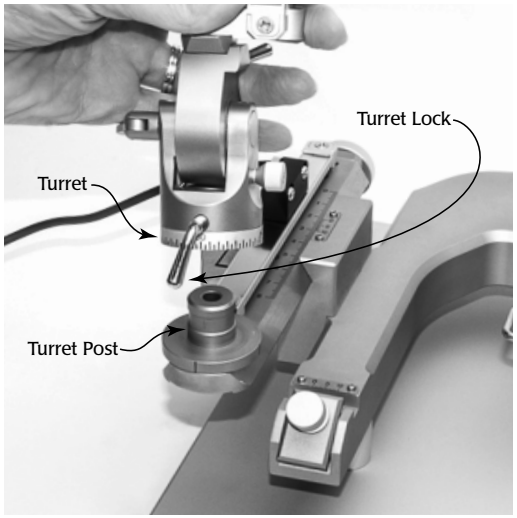

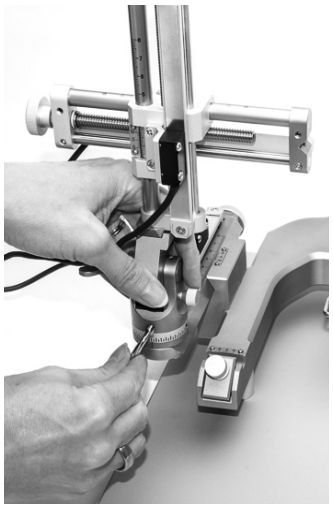

Fig. 5—(Left) Position the turret over the post and slide it into place.
Fig. 6—(Right) Tighten the turret lock.

4. Remove the six AA batteries and replace them with fresh ones.

Fig. 22—The controller holds six AA batteries.

5. Reinstall the battery covers and secure the screws. Reinstall the cover plate. Insert and tighten the fours screws to hold it in place.

ACCESSORIES

Adaptors

502063	Mouse and Neonatal Rat Adaptor
502213	Platform, Gas Anesthesia, with mouse Mask (use with 502063)
502062	Mouse Adaptor
502204	Rat Adaptor with a pair of ear bars, 18º
502226	Cat/Monkey Adaptor for 502600 series
502238	Spinal Adaptor for Rat
502060	Guinea Pig Adaptor for 502600 series
502241	Dog/Monkey Adaptor for Parallel Rail Stereotaxic instruments, with a pair of ear bars, 18º

The WPI Mouse and Neonatal Rat Adaptor (**502063**) employs light, Delrin® adjustable ear bars with tapered points on one end and thumbscrew on the other to facilitate surgery on mice and rat pups. Adjustable ear bars may be independently adjusted in height to the level the skull. Laser engraved scales show the vertical positions of the ear bars. A tooth bar and nose clamp secures the nose. A well in the thick aluminum body may be filled with dry ice and alcohol for hypothermic anesthesia of neonatal animals. The adaptor clamps securely on the right side of the "U" frame of the stereotaxic instrument. When gas anesthesia is needed, a gas mask (**502213**) may be mounted on the adaptor.

MAINTENANCE

Replacing the Batteries

1. To replace the batteries in the controller, turn it upside down and remove the four screws on the bottom.

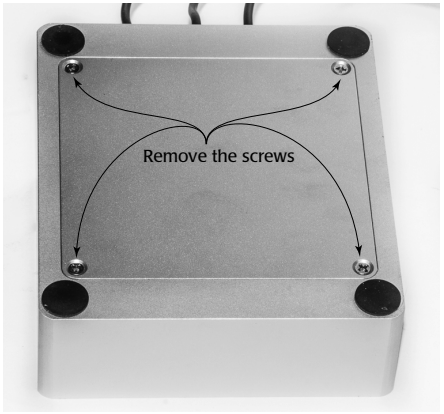

Fig. 19—First, remove the four screws on the bottom of the controller.

2. Tilt the controller to remove the cover plate.

3. Using a small screw driver, remove the three small screws on the battery covers (Fig. 20). Then, place your thumb on the finger grip located on the left side of the battery covers. Press and slide the cover to the right (Fig. 21). Remove the battery covers.

Fig. 20—(Left) Remove the screws holding the battery covers.
Fig. 21—(Right) Press and slide the battery covers to the right to remove them.

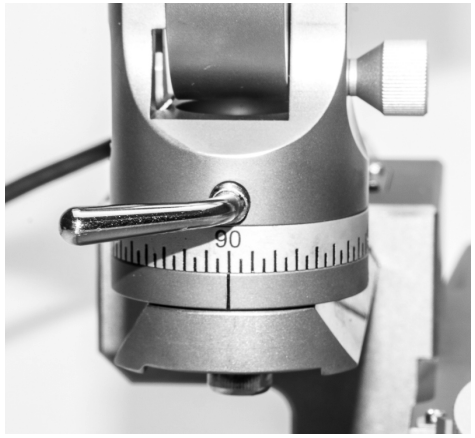

Fig. 7—Line up the scale on the turret with the line on the turret post to properly orient the manipulator assembly in the horizontal plane.

4. The probe holder is provided pre-assembled with a mounting clamp which incorporates a V-shaped fitting that couples directly to the mating ˝V˝ recess on the X-axis of the manipulator. Align the probe holder with the manipulator and hold it in place (Fig. 8).

5. Align the thumbscrew with the hole. Then, tighten the thumbscrew to secure the probe holder to the manipulator assembly (Fig. 9).

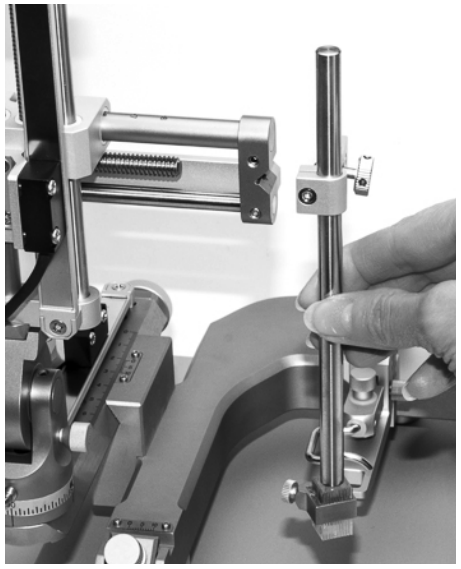

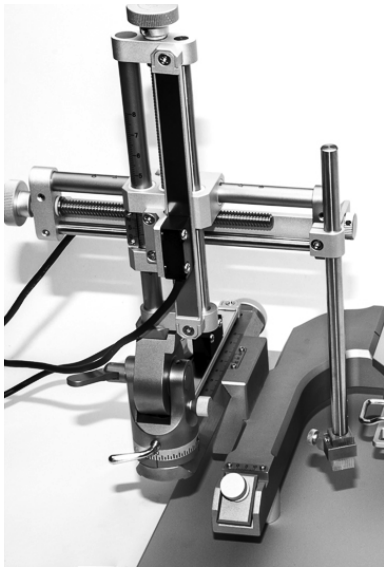

Fig. 8—(Left) Align the probe holder with the V-shaped notch on the manipulator arm.
Fig. 9—(Right) Secure the probe holder with the thumbscrew.

6. The ear bars mount into the ear bar channels (Fig. 9). Loosen the thumb screws. Slide each ear bar into its slot and gently tighten the thumbscrews enough to secure them without over-tightening them (Fig. 10).

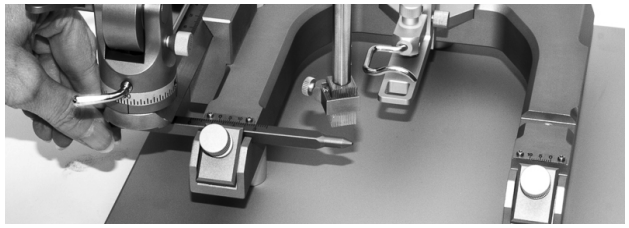

Fig. 10—Slide the ear bar into position and tighten the thumbscrew.

NOTE: The pointed end of the ear bar should face toward the center, and the ear bars should be installed so that the numbers are right side up and the increments on the two vernier scale touch each other.

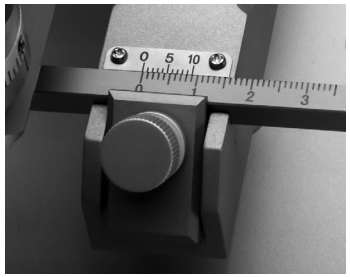

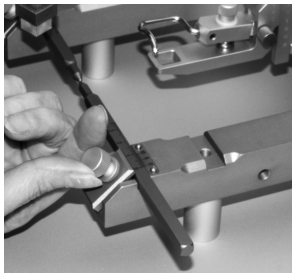

Fig. 11—(Left) Mount the ear bars so the numbers are right side up.
Fig. 12—(Right) Use the thumbscrews to secure the ear bars in place.

7. The digital display (Fig. 12) shows the coordinates of all three axes. It has color-coded cable connectors on the back side (Fig. 13). Each cable also has a corresponding, color-coded connector. Each connector has a notch on it, so that it will only fit into the control box if it is properly oriented (Fig. 14). Plug the red cable into the red (X) port, the blue cable into the blue (Z) port and the yellow connector into the yellow (Y) port (Fig. 15).

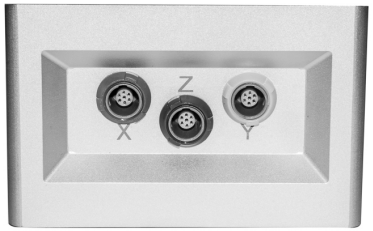

Fig. 13—(Left) The digital display is battery operated and has controls to independently power and zero all three axes.
Fig. 14—(Right) The back side of the controller has three connectors, one for each axis.

Fig. 15—(Left) Each connector has a notch that must be properly aligned with the connection port on the back of the controller.
Fig. 16—(Right) Orient the cable so that the notch is pointed up. Then gently slide it into the color-coded port.

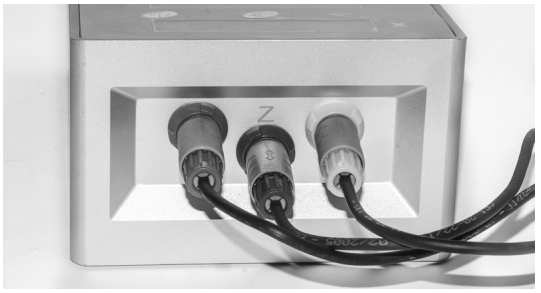

Fig. 17—The three cables are connected properly.

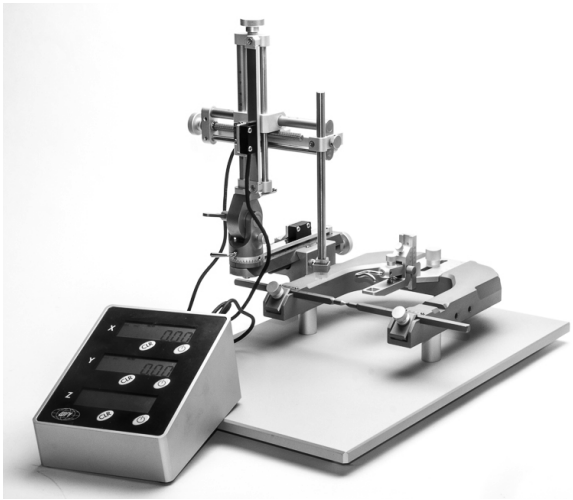

Fig. 18—The assembled system is ready for use.